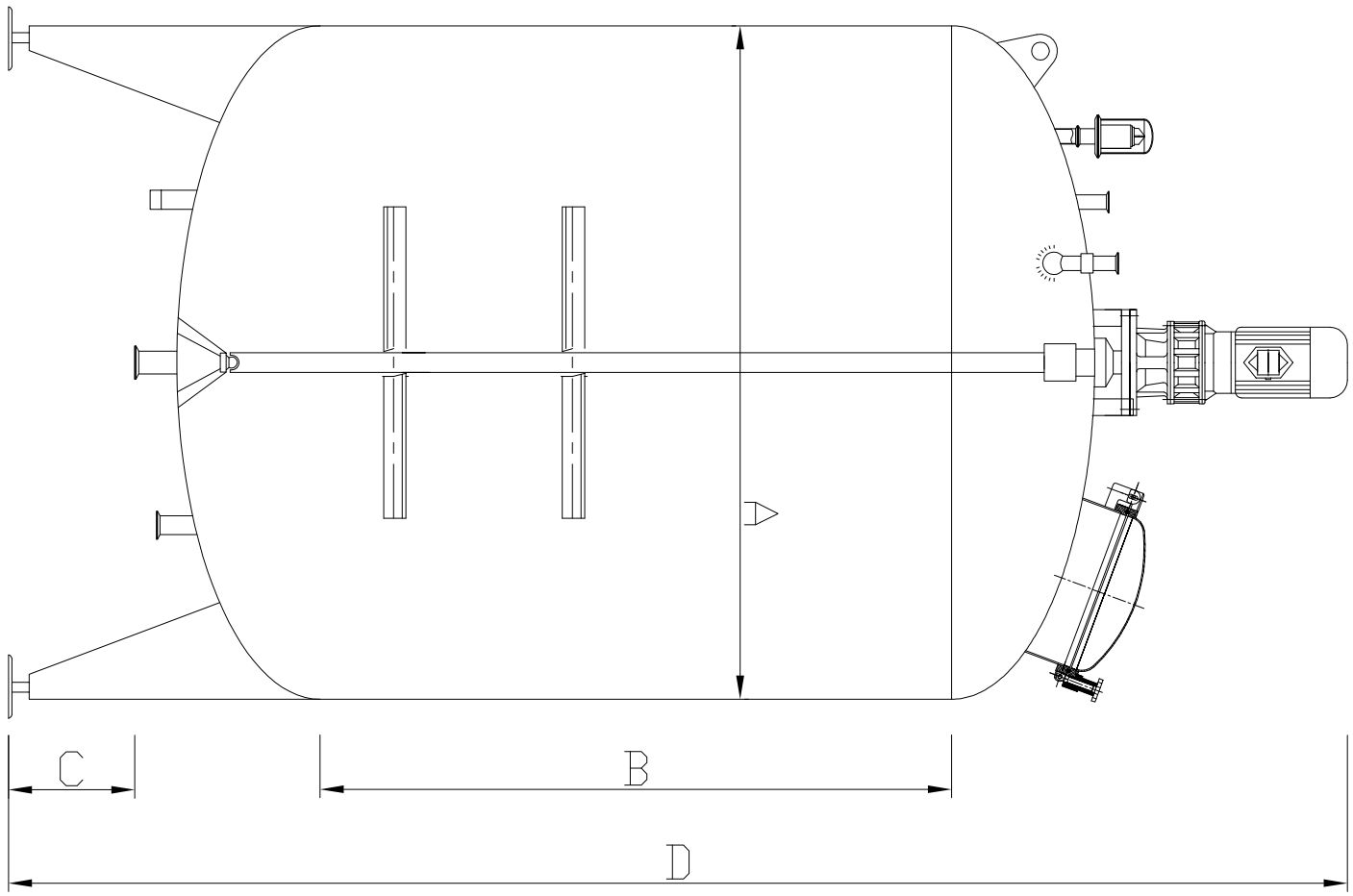
A
C
B
D